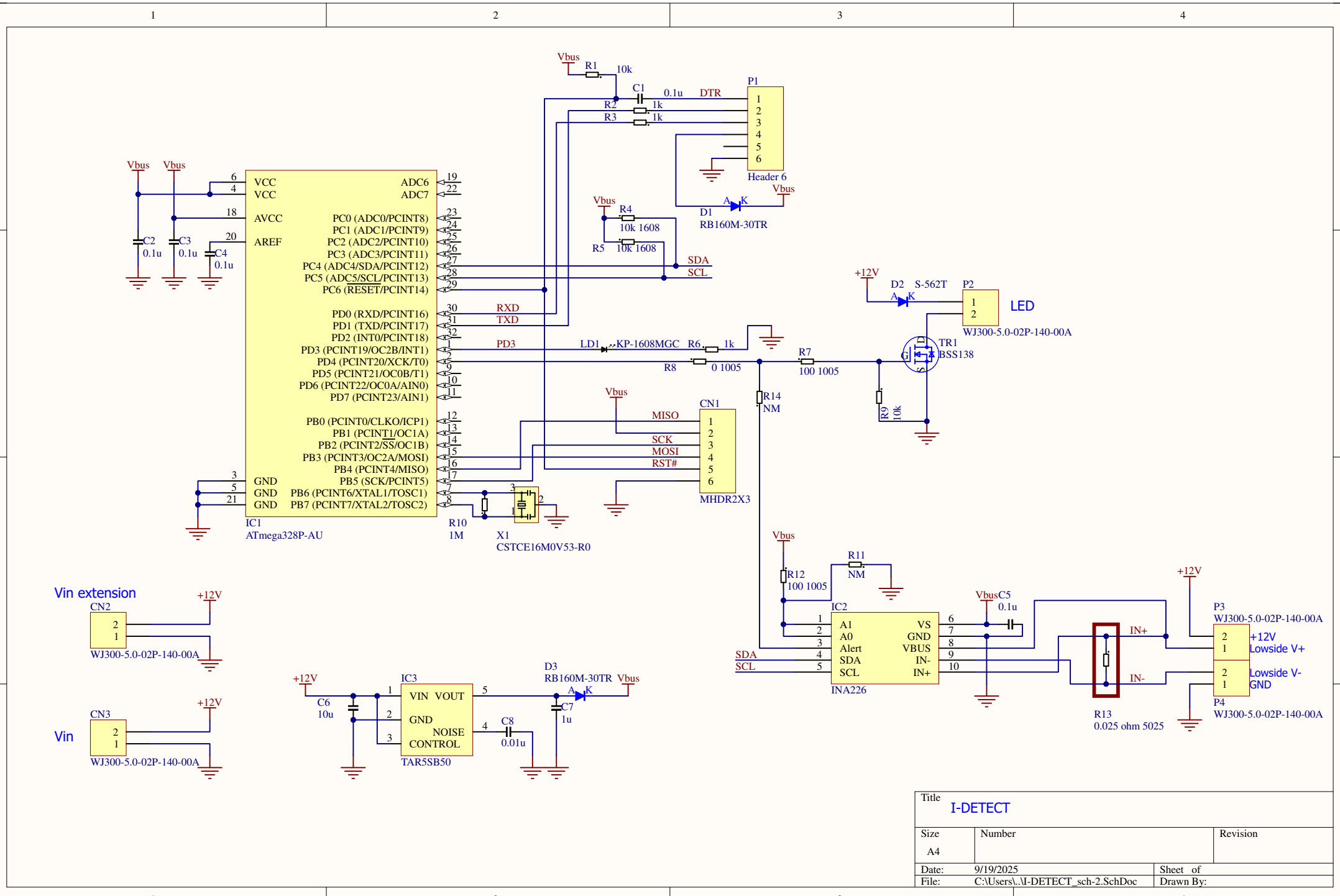

Title	I-DETECT	
Size A4	Number	Revision
Date: 9/19/2025		Sheet of
File: C:\Users\..\I-DETECT_sch-2.SchDoc		Drawn By: