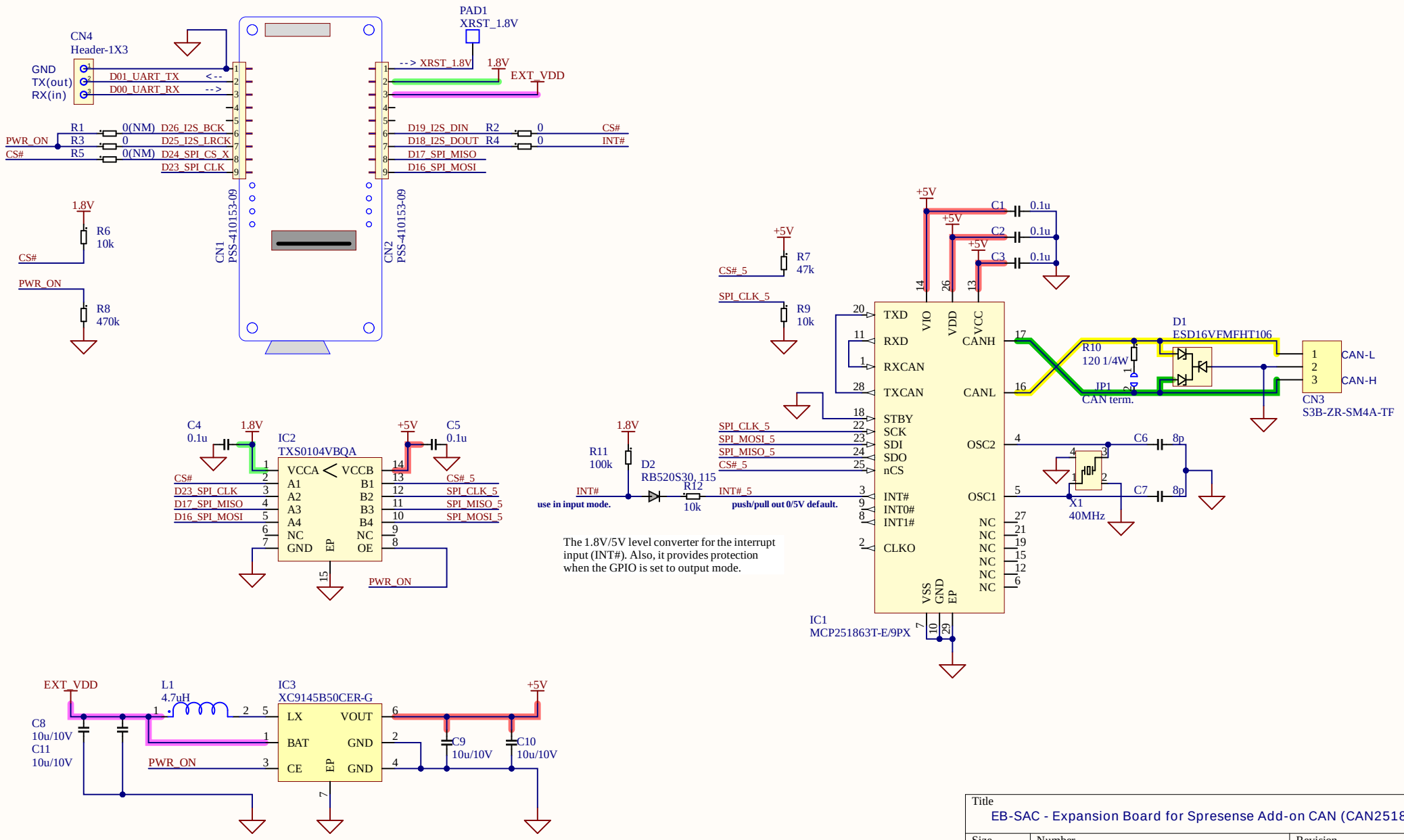

Title		
EB-SAC - Expansion Board for Spresense Add-on CAN (CAN2518)		
Size A4	Number	Revision
Date: 6/21/2025		Sheet of
File: C:\Users\..\EB-SAC_sch.SchDoc		Drawn By: